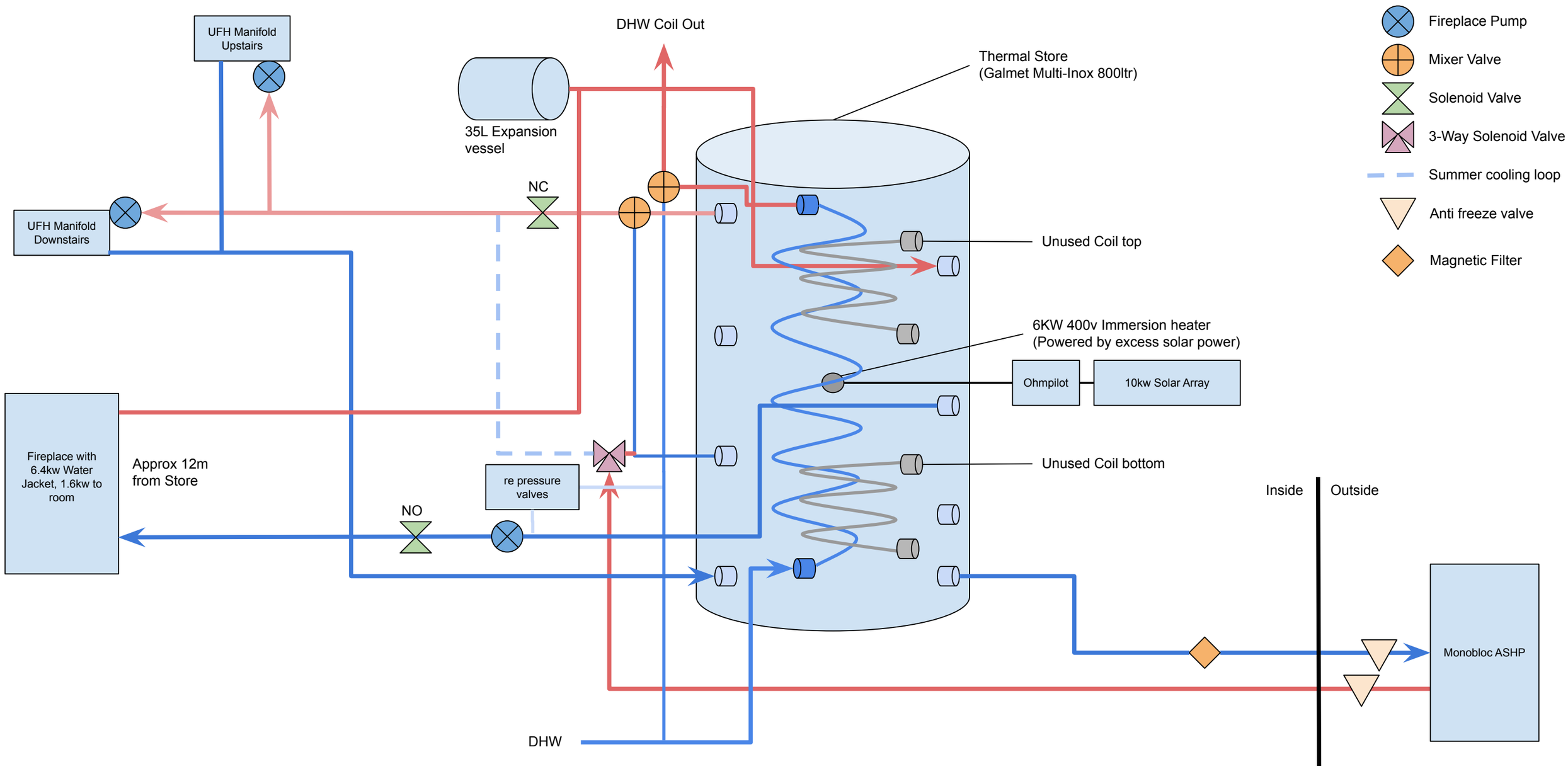
UFH Manifold Upstairs
DHW Coil Out
Thermal Store
(Galmet Multi-Inox 800ltr)
Fireplace Pump
Mixer Valve
Solenoid Valve
3-Way Solenoid Valve
Summer cooling loop
Anti freeze valve
Magnetic Filter
35L Expansion vessel
NC
UFH Manifold Downstairs
Unused Coil top
6KW 400v Immersion heater
(Powered by excess solar power)
Ohmpilot
10kw Solar Array
Fireplace with 6.4kw Water Jacket, 1.6kw to room
Approx 12m from Store
re pressure valves
Unused Coil bottom
NO
Inside
Outside
Monobloc ASHP
DHW